DALI-2 CS

Datasheet

Combi Sensor Modul

DALI sensor module
for motion detection,
light detection
and lighting control

Master device:
application controller active

Art. Nr. 86458670

Detection range variants: -15, -O, -30, -C
Colour variants: -W16, -B
Installation type variants: -ZD, -AP

© 2025-03-02, Lunatone Industrielle Elektronik GmbH

DALI-2 Combi Sensor - Multifunctional Sensor Module

Overview

- Sensor Module for DALI and DALI-2 lighting systems
- Movement detection (PIR) instance type 2 (62386-303) and light intensity measurement instance type 3 (62386-304)
- 4 operating modes:
  - Movement triggered
  - Movement triggered with constant light control
  - Constant light control
  - Light control (4 thresholds)
- Operating modes can be changed via scenes and external DALI commands
- Corridor function – second light level before off in case of absence
- Light threshold-controlled regulation for the control of blinds or roller blinds
- The module can be used as a DALI light controller or just as sensor unit for integration in building management systems
- Easy configuration via DALI-Cockpit Software Tool and Lunatone DALI USB interface.
- Multiple sensor modules can be installed within a DALI system.
- Configurable synchronisation of multiple DALI-2 CS modules to control the same effective range
- Supply via the DALI bus, no additional power supply needed
- Double terminals for easy installation
- Optimized types for different applications and detection areas (hall, office, long distance, corridor) available
- Different colour variants: pure white (RAL9010), traffic white (RAL9016), and black.
- Version DALI-2 CS Integration: https://www.lunatone.com/en/product/dali-2-cs-integration/

Specification, Characteristics

type	**DALI-2 CS**				
article number	86458670	86458670-15	86458670-O	86458670-30	86458670-C
application	standard	hall	office	long distance	corridor

electrical data	
supply	via DALI signal line (DALI-voltage according IEC62386)
marking terminals	DA, DA
typical current consumption DALI	5.5 mA
power consumption	<100mW
control	DALI

© 2025-03-02, Lunatone Industrielle Elektronik GmbH

article number	86458670	86458670-15	86458670-O	86458670-30	86458670-C

insulation data

impulse voltage category	II
pollution degree	2
rated insulation voltage	250V
rated impulse withstanding voltage	4kV
insulation DALI/housing	reinforced isolation
insulation test voltage	3000Vac

environmental conditions

storing and transportation temperature	-20°C … +70°C				
operational ambient temperature	-20°C … +60°C	-20°C … +55°C	-20°C … +60°C	-20°C … +60°C	-20°C … +60°C
rel. humidity, none condensing	15% … 90%				

technical data

Motion Detection (62386 -303)					
principle	PIR	PIR	PIR	PIR	PIR
detection range (at >8°C temperature difference)	12m	15m	2.3m / 3m	30m	5m
typical mounting height	8m	12m	3m	15m	-
zones	92	128	36 / 48	188	88+16
horizontal	±51°	±34,5°	±44°/±90°	±43°	±75°
vertical	±46°	±34,5°	±44°/±90°	±22°	+10°/-25°
min. temperature difference	>4°C	>4°C	>4°C	>4°C	>4°C
details	Figure 1, page 5	Figure 2, page 6	Figure 3, page 6	Figure 4, page 7	Figure 5, page 7
light sensor (62386-304)	range: 0-2047lux (11bit), resolution: 1lux event:0-2047lux(10bit), resolution: 2lux				
function	configurable				

general data

protection class	II in intended use		
protection degree housing	IP40	IP20 or IP54 for art.nr. extend: "-IP54"	IP40
Protection degree terminals	IP20		IP20
mounting	back box – dimensions see page 4 surface mounted (article number extension „-AP") – dimensions page 5 suspended ceiling (article number extension „-ZD") – dimensions page 5		
available colours	RAL9010 RAL9016 (article number extension "–W16") Black (article number extension "–B")		
functional versions	application controller and instances		

terminals

connection type	spring terminal connector
wire size solid core	0,5 … 1,5 mm^2 (AWG20 … AWG16)
wire size fine wired	0,5 … 1,5 mm^2 (AWG20 … AWG16)
wire size using wire end ferrule	0,25 … 1,5 mm^2
stripping length	8,5 … 9,5 mm / 0,33 … 0,37 inch

© 2025-03-02, Lunatone Industrielle Elektronik GmbH

standards	
EMC	EN 61547 EN 55015
safety	EN 61347-2-11 EN 61347-1
markings	DALI-2, CE

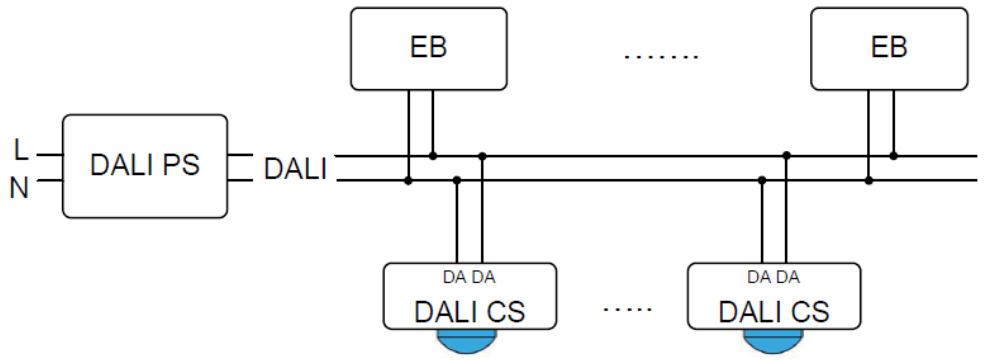

typical application: several sensors on one DALI-line

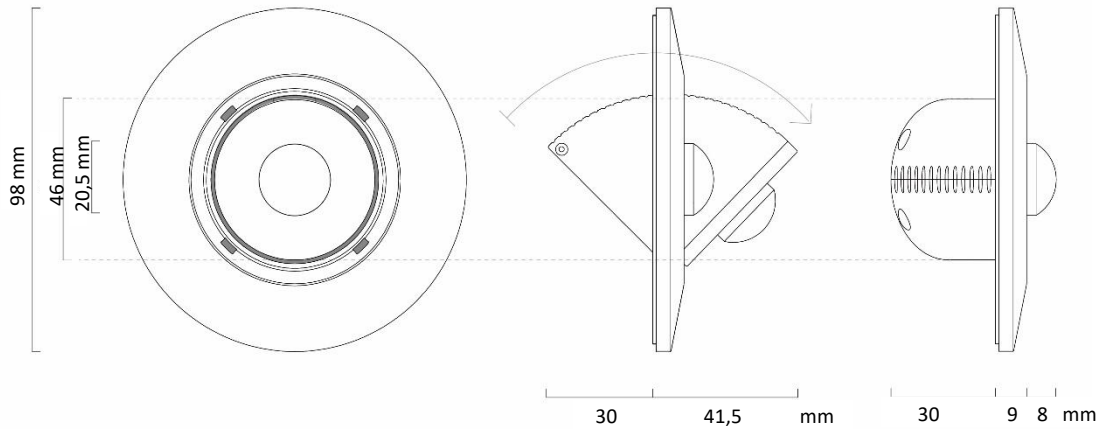

dimensions and space requirements

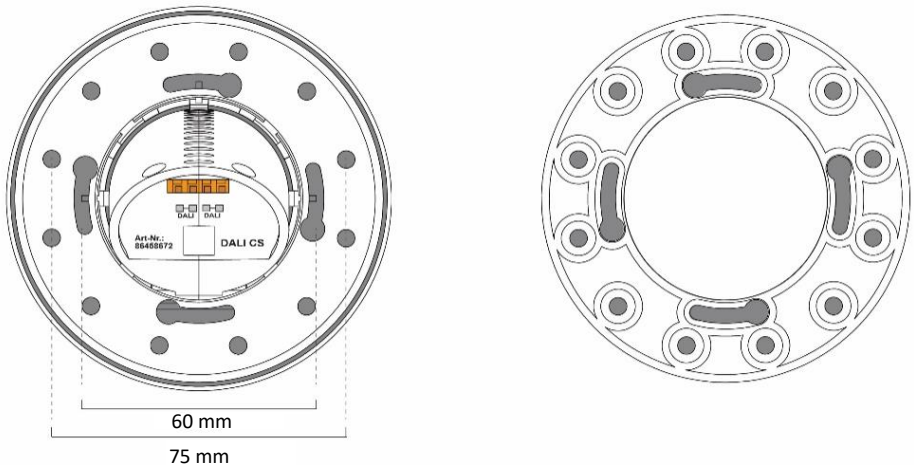

dimensions mounting ring

© 2025-03-02, Lunatone Industrielle Elektronik GmbH

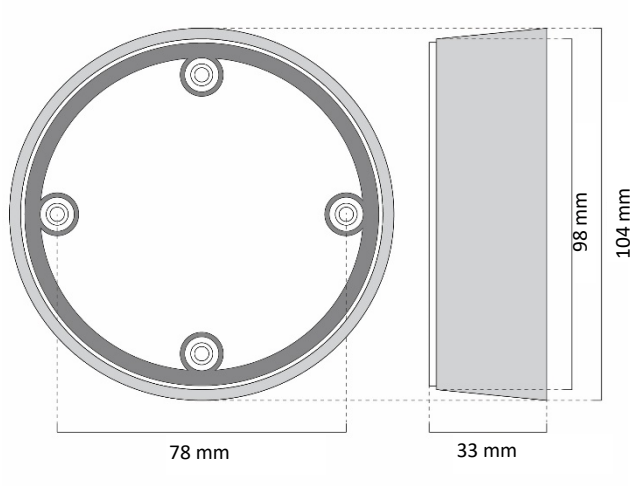

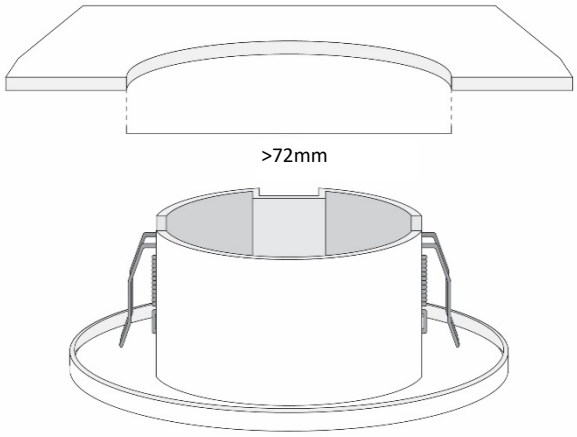

surface mounting
dimensions accessory
article number addition „-AP“

suspended ceiling
dimensions mounting hole diameter
article number addition „-ZD“

Sensor types

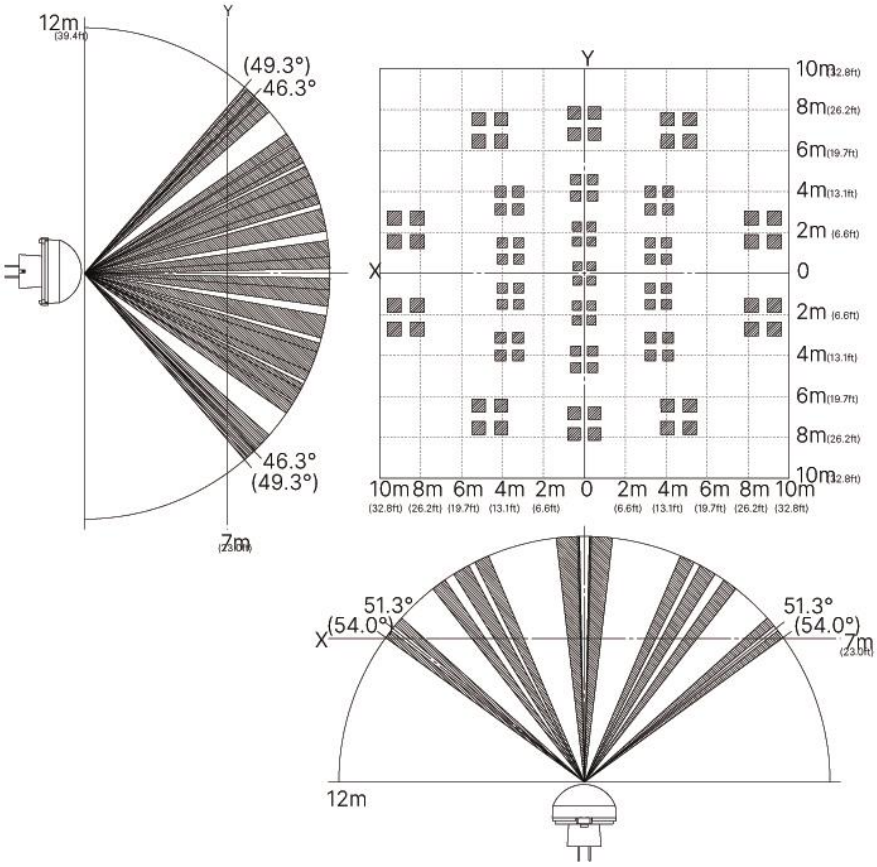

Figure 1 **CS standard** motion detection (Art. Nr.: 86458670)
Detection area: **X-Y cross section at 7m**

 © 2025-03-02, Lunatone Industrielle Elektronik GmbH

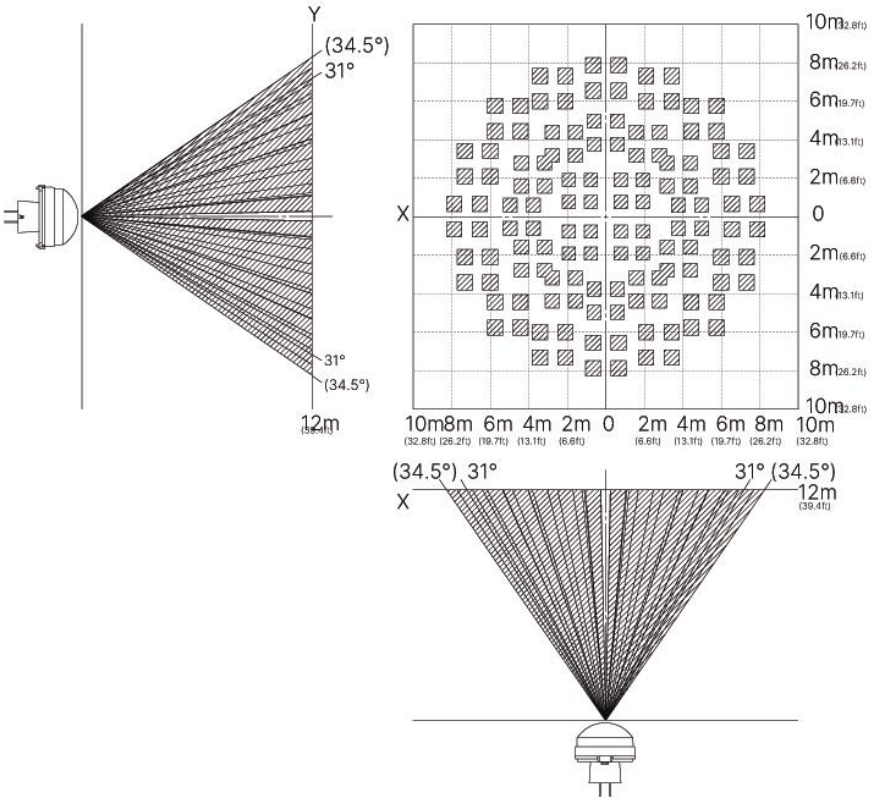

Figure 2 **CS-15 hall** motion detection (article number addition**:** 86458670-**15**)
detection area **X-Y cross section at 12m** - High density long distance detection type

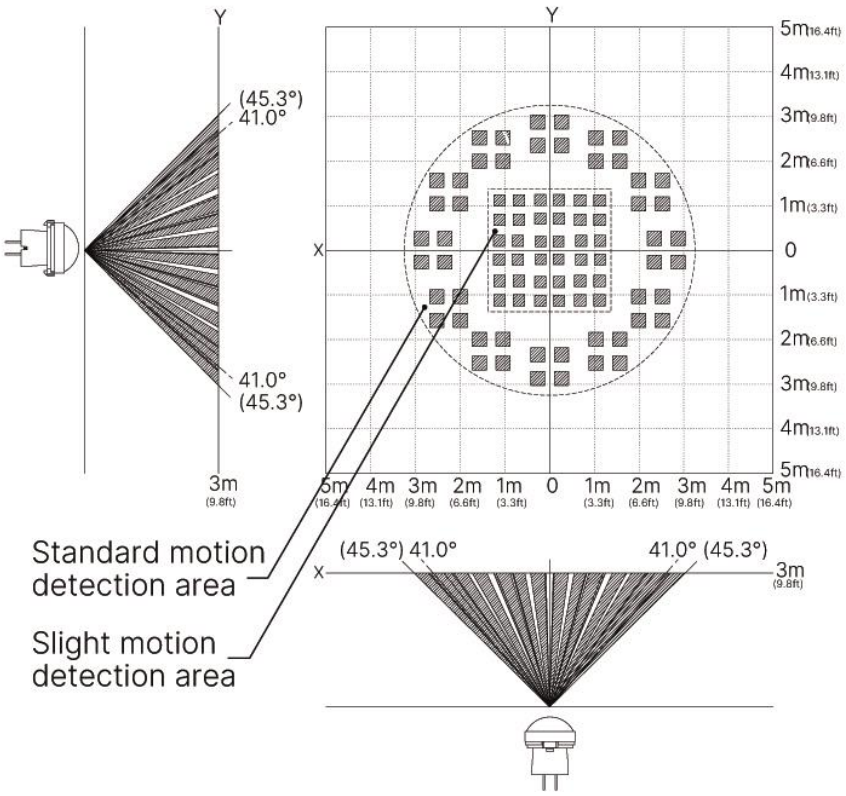

Figure 3 **CS-O Office** motion detection (article number addition: 86458670-**O**)
detection area: **X-Y cross section at 3m** - The rectangular centre zone is optimized for detecting smallest movements.

 © 2025-03-02, Lunatone Industrielle Elektronik GmbH

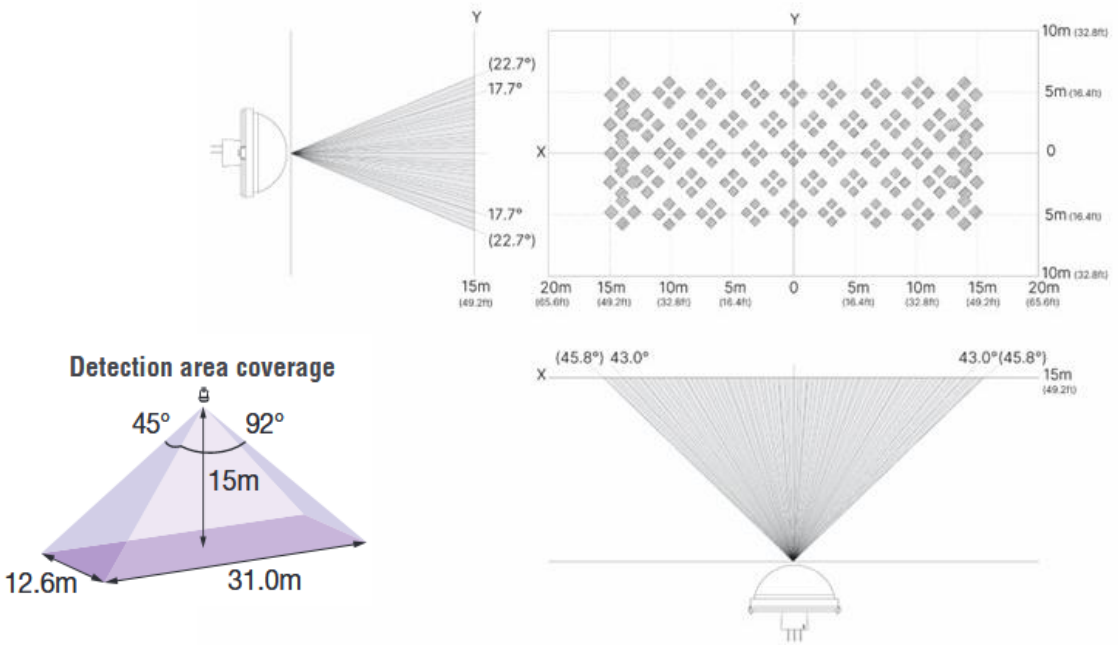

Figure 4 **CS-30 long distance** motion detection (article number addition**:** 86458670-**30**)
detection area: **X-Y cross section at 15m** - High density, wide angle, long distance detection type for high bay applications

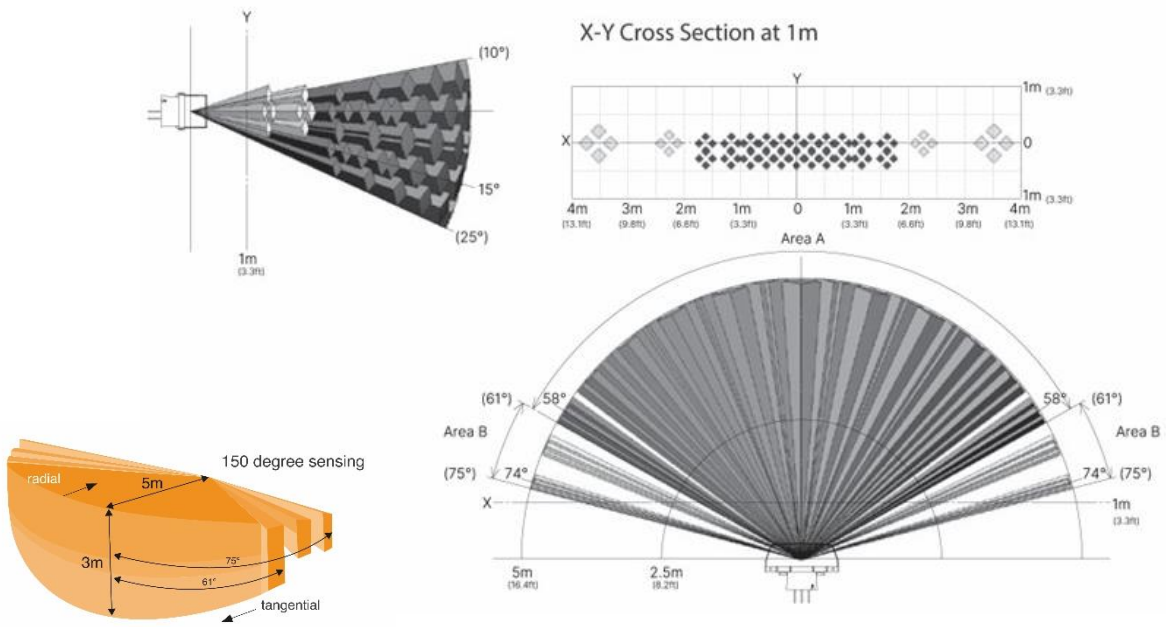

Figure 5 **CS-C Corridor** motion detection (article number addition: 86458670-**C**)
Detection area: **X-Y cross section at 1m** - wide angle for corridors.

 © 2025-03-02, Lunatone Industrielle Elektronik GmbH

Factory Setting

For simple applications the factory settings are sufficient. The device configuration can be changed via the DALI Cockpit and adapted to the current application.

	DALI-2 CS Art. Nr.: 86458670
DALI-2 Settings	Application Controller – Master Mode
Operating Mode	Motion detection without constant light control, an external *ON command* deactivates motion detection until the next external *OFF command*
Effective range	Broadcast
ON command (1)	Recall Max
Hold Time (2)	10min
Absence value (3)	none
Hold Time Absence (4)	0s
OFF command (5)	Off
OnCMD threshold	none
Bright Out threshold	none
Power Up behaviour	No action
Constant light control (CLC)	inactive
Front-LED (motion indication)	inactive
Instance 0 - motion event messages	inactive
Instance 1 – light intensity event messages	inactive

Instance Default Settings

To use the motion sensor instance or light sensor instance in combination with a DALI-2 CS or DALI-2 LS Master the following instance settings are needed, these are set as delivery default, only event messages need to be enabled this is done by the DALI-2 CS Master automatically (it is also possible to enable event messages manually without the DALI Cockpit via the DALI command ENABLE INSTANCE):

Instance Nr 0 – Motion:

Event messages	inactive
Event Schema	device addressing
Event Filter	Occupied Vacant
Deat time	0.00 sec
Report time	not applicable
Hold time	1 sec

Instance Nr 1 – light:

Event messages	inactive
Event Schema	device addressing
Event Filter	illuminance level
Deat time	0.8 sec
Report time	unused
Hysteresis Min	5 Lux
Hysteresis	5 %

For general information on DALI instances see also the "DALI-2 Instance guide".

 © 2025-03-02, Lunatone Industrielle Elektronik GmbH

Installation

- the DALI-2 CS is directly connected and supplied by the DALI bus. A DALI bus power supply is required.
- The connection to the DALI terminals can be made regardless of polarity.
- The terminals are suitable for wire cross-sections ranging from 0.5 mm^2 to 1.5 mm^2.
- back box mounting: installation of the mounting ring directly on the back box. The housing is then simply plugged onto to the mounting ring. The recessed head has sufficient space within the electrical installation box, enabling a flat installation.
- For mounting the sensor on cavity walls or suspended ceilings a version including additional fixtures with spring-clips is available: article number extension “-ZD”.
- Version for surface mounting is available: article number extension “-AP”.
- The CS Module enables alignment to the desired detection area through 360 ° axial rotation and vertical inclination of up to 40 °.
- The wiring should be carried out as a permanent installation in a dry and clean environment.
- Installation may only be carried out in a voltage-free state of the system and by qualified specialists.
- National regulations for setting up electrical systems must be followed.
- The DALI wiring can be realized with standard low-voltage installation material. No special cables are required.
- Only 1 wire may be connected to each terminal. When using double wire end ferrules, the connection capacity of the terminal must be considered.

☞ **Attention:** The DALI-signal is not classified as SELV circuit (Safety Extra Low Voltage). Therefore, the installation regulations for low voltage apply.

☞ **Note:** The cross section: the voltage drop on the DALI line must not exceed 2V at maximum length (300m) and maximum bus load (250mA).

© 2025-03-02, Lunatone Industrielle Elektronik GmbH

Presence Detection

For movement detection a temperature difference between the moving object and environment of at least 4°C is required. Heat sources such as copiers or heaters may have a negative influence on motion detection.

Presence Detection (Standard)

The applied PIR method allows coverage of relatively large areas using only one sensor head. With opening angles of 92° and 102° and a sensor mounted at a height of 5 meters the 92 detection zones cover an area of more than 100m^2. The distance between sensor and the object of interest should be less than 12 meters, which limits the mounting height to about 8m. See Figure 1 on page 5.

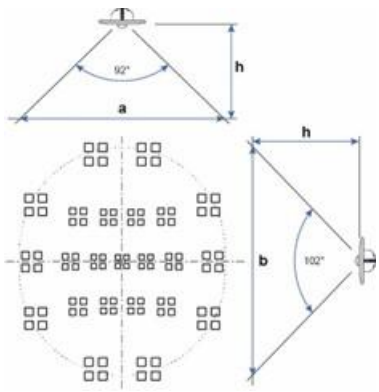

h [m]	a [m]	b [m]	A [m²]
2,50	5,2	6,2	25,1
2,7	5,6	6,7	29,3
3,0	6,2	7,4	36,2
3,5	7,2	8,6	49,2
4,0	8,3	9,9	64,3
5,0	10,4	12,3	100,4
6,0	12,4	14,8	144,6
8,0	16,6	19,8	257,1

Table 1 relation of mounting height and detection area

Presence Detection CS-15

The sensor type „-15“ is suitable for high rooms (e.g. halls) with mounting height up to 12m. The detection range is about 15m. See Figure 2 page 6

h [m]	a [m]	b [m]	A [m2]
5,0	6,9	6,9	37,1
7,5	10,3	10,3	83,5
10,0	13,7	13,7	148,4
12,0	16,5	16,5	213,7

Table 2 relation of mounting height and detection area

Presence Detection CS-O

Suitable for office application where detection of slight motion is required e.g. detection of arm movement of a sitting person. The DALI CS-O is tailored to this application and has a sensitive “inner area” and a standard detection “outer area”. The maximum mounting height is about 3m.
See Figure 3 page 6

The rectangular central zone is optimized for detection of the slightest motion. The area has an opening angle of 44 ° x 44 ° and 36 detection zones. With a mounting height of e.g. 2.2m, an area of 3.24 m2 can be covered. (see table 3).

The outer standard motion detection zone has an opening angle of 90 ° x 90 ° and 48 detection zones. With a mounting height of e.g. 2.2m, an area of 15.2m2 can be covered. (see Table 3).

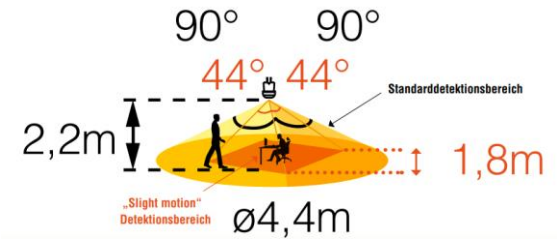

The recommended mounting height is 3m. The distance between the sensor and the object to detect should not be greater than 3.1m.

h [m]	Standard Detektionsbereich a [m]	b [m]	A1 [m2]	Slight Motion Detektionsbereich l [m]	A2 [m2]
2,0	4	4	12,5	1,6	2,56
2,2	4,4	4,4	15,2	1,8	3,24
2,5	5	5	19,6	2	4
3,0	6	6	28,2	2,4	5,76

Table 3 relation of mounting height and detection area

© 2025-03-02, Lunatone Industrielle Elektronik GmbH

Presence Detection CS-30

The type -30 has an ultra wide and long distance detection type and is suitable for application in high bay aisles. The maximum mounting height is about 15m. For this installation height of 15m it gains a field of view of approx. 30m x 12m, with 188 detection zones which minimize blind spots, see also Figure 4 page 7.

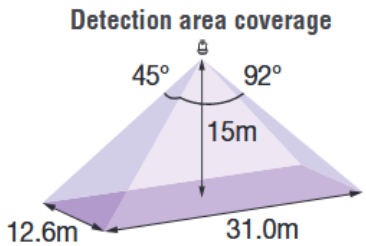

Presence Detection CS-C

The DALI-2 CS Corridor has a "hammerhead lens" with a detection range of up to 5m and an asymmetrical alignment. The horizontal detection angle is up to 150°, while the vertical is asymmetrical (+ 10 °, -25 °). The lens is particularly recommended for wall mounting e.g. in corridors. See also Figure 5page 7.

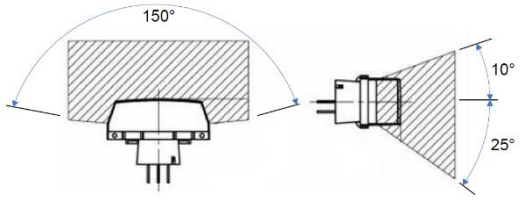

Cycle of Motion Detection

The motion detection is always processed according to the following sequence:

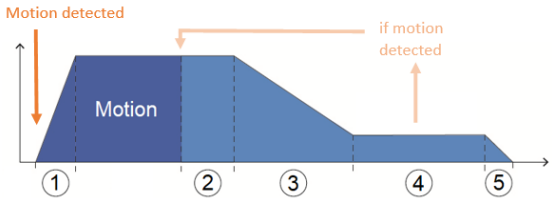

Figure. 6 motion/presence detection sequence

States:
1: 1st light level (with defined fade time)
2: Hold Time (for 1st light level)
3: 2nd light level (with defined fade time)
4: 2nd Hold Time (for 2nd light level)
5: off state (fade out)

When motion is detected the sensor switches to the configured light level **(1)**. While further motion is detected or the hold time is running **(2)** the light level stays on – either on a fix light level or controlled by a constant light control algorithm.

If no further motion was detected, the count down of the hold time starts **(2)**.

After the hold time elapsed the sensor changes to the 2nd light level **(3)** for a defined time **(4).** This 2nd light level is a user defined value (no constant light control). If motion is detected in this state, the sensor switches to the first light level **(1)**. In case no further motion is detected the Off command **(5)** is sent.

HINT: set the “absence level” to a low value, otherwise it could be higher than the light level set by the constant light control.

© 2025-03-02, Lunatone Industrielle Elektronik GmbH

Light Sensor

Light measurement

All DALI-2 CS versions also include a light sensor. The light sensor measures the reflected illuminance in a range from 0 to 2047 lux. The resolution is 2 lux.

The incident light is rated by the spectral sensitivity of the human eye and thus comparable to the subjective visual perception of brightness.

The incident light is accumulated over the area covered by the lens and can be interpreted as average value in the detection area. A reference to the reflecting surface below the sensor can be established with the help of a reference measurement and adjustable offset value.

Functionality

It is necessary to distinguish between application controller and DALI-2 instances.

The **application controller** gives direct DALI control commands that are immediately executed by the DALI drivers.

DALI-2 instances generate event messages that are interpreted and processed by higher-level control units with DALI connection (e.g. DALI-2 CS in Master Mode, WAGO, Beckhoff, LUNATONE DALI-2 KNX gateway). General information on the DALI-2 instance mode: https://www.lunatone.com/wp-content/uploads/2021/10/DALI-2_Instance-Guide_EN_M0024.pdf)

Configuration of instances is described in section: Instances on page 23.

The **DALI-2 CS** Art. Nr.: 86458670:
can be used as either an application controller: *Master Mode*, or in instance mode: *Slave Mode*. For the application controller all operating modes and setting options described in the document are available.

A version of the DALI-2 CS without application controller is also available, see DALI CS Integration_Art. Nr.: 86458670-INT.

Operating Modes

The DALI-2 CS module offers 4 different operating modes: motion control, motion control with constant light control, sole constant light control or light control via light thresholds.

External commands can also be used to influence the operating behaviour of the sensor (e.g. when operated via another control device). The reaction to external commands is explained in detail for each operating mode.

Operating Mode 1 – motion control

- Movement activates a fixed light level

If movement is detected the time sequence is activated with a user defined fixed light level in State 2 (see Figure. 6 "Motion detection: sequence" on page 11). The light level stays active until no more movement is detected and the hold time has elapsed. Then the light level will be switched to the 2nd user defined light level.

Additional threshold values can be defined, such that the motion control is only active above or below this defined threshold.

The operating behaviour can be influenced by external on / off / dimming and scene commands. The options for each command are described on page 19

© 2025-03-02, Lunatone Industrielle Elektronik GmbH

Operating Mode 2 – motion control with constant light control

- Movement activates constant light control
- 2nd light level is user defined and constant

If movement is detected the time sequence is activated with constant light control in State 2 (see figure "Motion detection: sequence" on page 11). The constant light control stays active until no more movement is detected and the “Hold On Time” has expired. Then the light level will be switched to the 2nd light value, which is a fixed user defined value.

Additional threshold values can be defined: such that the motion and light control is only active above or below this defined threshold.

The operating behaviour can be influenced by external on / off / dimming and scene commands. The options for each command are described on page 19

Operating Mode 3 – constant light control

- Constant light Control
- No motion detection

In this operating mode, only the light sensor is used; motion detection is inactive. The constant light control can be switched on and off with DALI commands (e.g. from a control device such as a DALI light switch).

The operating behaviour can be influenced by external on / off / dimming and scene commands. The options for each command are described on page 22.

Operating Mode 4 – light threshold control

- Light control via light thresholds
- No motion detection

Only the light sensor is used in this operating mode. Both motion detection and constant light control are inactive. 4 light thresholds can be defined which trigger a DALI command on either falling below or exceeding the threshold. 2 of the 4 thresholds can be used to send commands repeatedly. The commands are sent at a user-defined interval until the threshold condition is no longer met.

The operating behaviour can be influenced by external scene commands. The options are described on page 23.

Additional Functionality

Response to external DALI commands

The behaviour of the control in the event of external commands (e.g. by a switch) can be configured with the DALI cockpit. Depending on the operating mode, different behaviours are possible. The options are described later in the document.

The following commands sent to the external control address are interpreted as an **ON command**:

RECALL MAX
RECALL MIN
ON AND STEP UP
DAP>0%
GOTO SCENE X (if the command was configured to be interpreted as an ON command for the CS)
GO TO LAST ACTIVE LEVEL (FW ≥ 6.0)

The following commands sent to the external control address are interpreted as an **OFF command**:

OFF
DAP=0
GOTO SCENE X (if configured to be interpreted as an OFF command for the CS)

Dimming commands: In addition, it can be specified how the motion control or light control should behave when manual dimming

© 2025-03-02, Lunatone Industrielle Elektronik GmbH

commands (UP/DOWN) to the external control address occurs.

On and Bright Out threshold

The motion sensor function can be adapted to the ambient light behaviour with the help of the On- and Off-Threshold.

ON Command threshold: The motion detection sequence can be started independent from the actual light level (default) or if the light level is above or below the OnCmd-threshold.
For a running motion sequence the presence detection – retriggering the sequence on motion - can either be set independent from the actual light level or only if the light level is below the **Bright out threshold**.

Bright out- Application example: Car Park lighting, that is set ON during the night (if measured light level < 70lux) but should not be kept ON during the day even though there might be constant detection of motion.

Power-On behaviour

It is possible to configure a start-up command to achieve a defined operating state after power on (return of the bus voltage). The start-up command can either be a DALI-command or a fast run of the motion detection sequence.

Multiple sensors controlling one area

To allow several sensors to control the same effective range (e.g. a corridor with sensors on each end), one of the sensors needs to be defined as master, while the others can be assigned to it to deliver their sensor values. In the DALI Cockpit software (tab: "Synchronisation") these sensor addresses for motion detection and sensor addresses for light detection can be specified. Backward compatibility for older generation CS is made possible by the option “Backward compatibility with eDALI CS”. Definition of the same effective range (target address 1) automatically synchronizes older generation sensors. The parameters of the sensors should be coordinated, especially the hold on times.

Configuration in the DALI Cockpit

The addressing and configuration of the DALI CS can be done easily with the help of the DALI Cockpit software tool and a suitable interface module (DALI-2 USB; DALI USB, DALI-2 WLAN, DALI-2 Display, DALI-2 IoT, DALI 4Net, DALI SCI RS232).

After an address has been assigned the parameters can be configured to fit the application.

The spatial allocation of each sensor can be done by selection of the “localize” check box in the DALI Cockpit. This will lead to flashing of the red LED of the currently selected sensor.

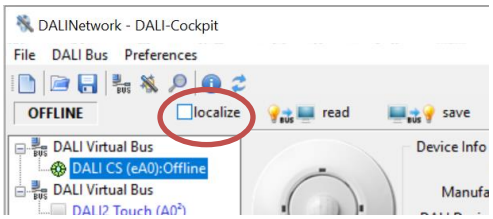

Configuration of the sensor is possible with the settings of the different tabs, explained in detailed on the following pages.

© 2025-03-02, Lunatone Industrielle Elektronik GmbH

Tab: "General" – Sensor mode, Operating Mode:

Selection of the fundamental configuration is made on the "General" tab, see Figure. 7. The sensor can be set to Master or Slave Mode.

In *Master-Mode*, the DALI-2 CS takes over control according to the subsequently selected operating mode. The DALI-2 CS *Master* is an **application controller** and gives direct DALI control commands that are immediately executed by the DALI gears.

In *Slave-Mode*, the DALI-2 CS is in **instance mode** and does not send any control commands. Instead, the DALI-2 instances generate event messages that are interpreted and processed by a DALI-2 CS in *Master* mode or by higher-level DALI control unit (e.g. WAGO, Beckhoff, LUNATONE DALI-2 KNX gateway).

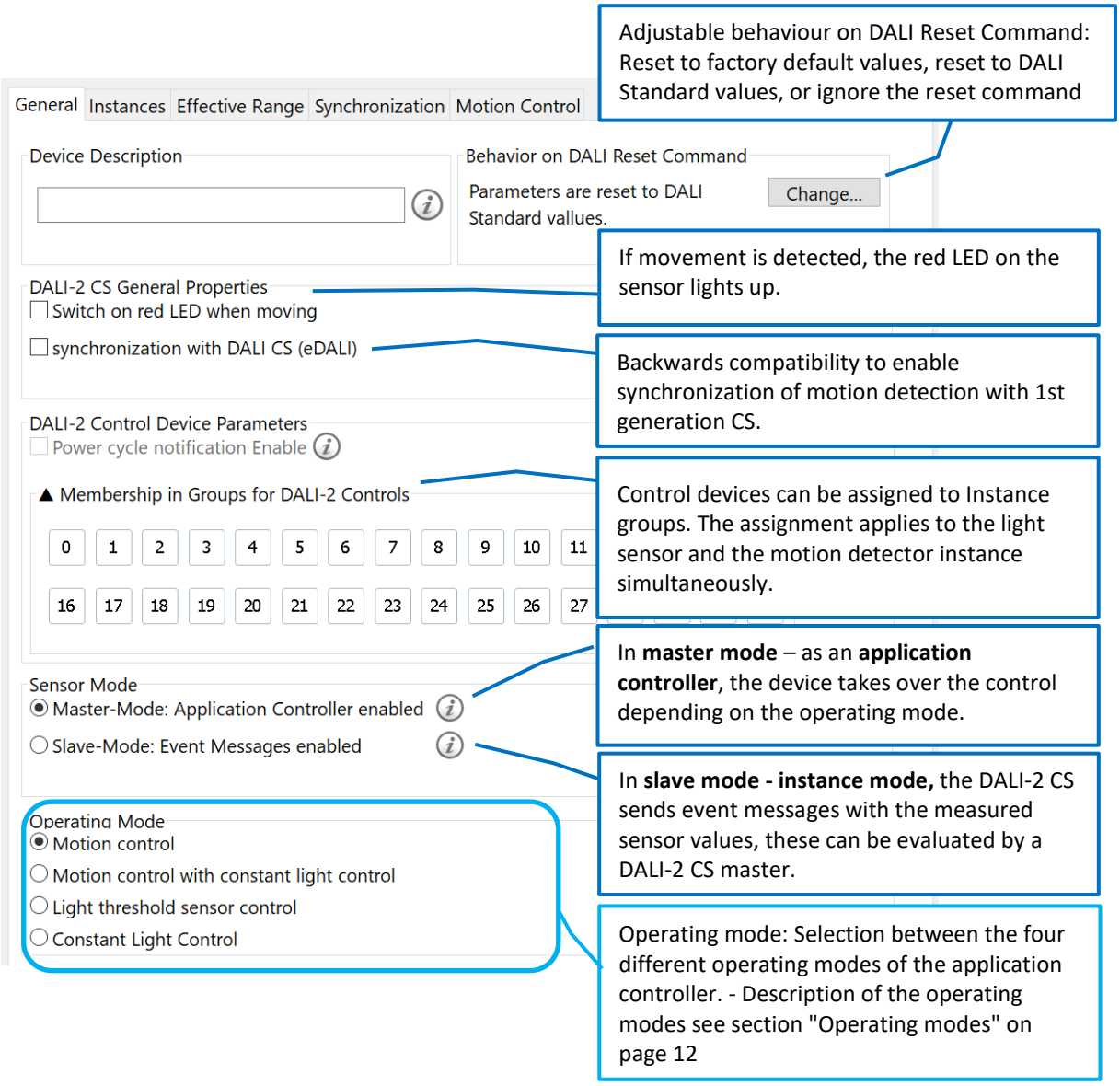

Figure. 7 Tab: "General" – sensor mode, operating mode

© 2025-03-02, Lunatone Industrielle Elektronik GmbH

Tab: "Effective range" - effective range, external control and power-up behaviour

See Figure. 8. On this tab the effective range of is defined: which DALI-gears are controlled by the CS. In addition, external control addresses can be defined, which the CS also monitors. The behaviour of the CS in case of other control units sending commands to these addresses can be defined. This way, manual control of lights via a switch can be realised, without interference of the motion detection or constant light control.

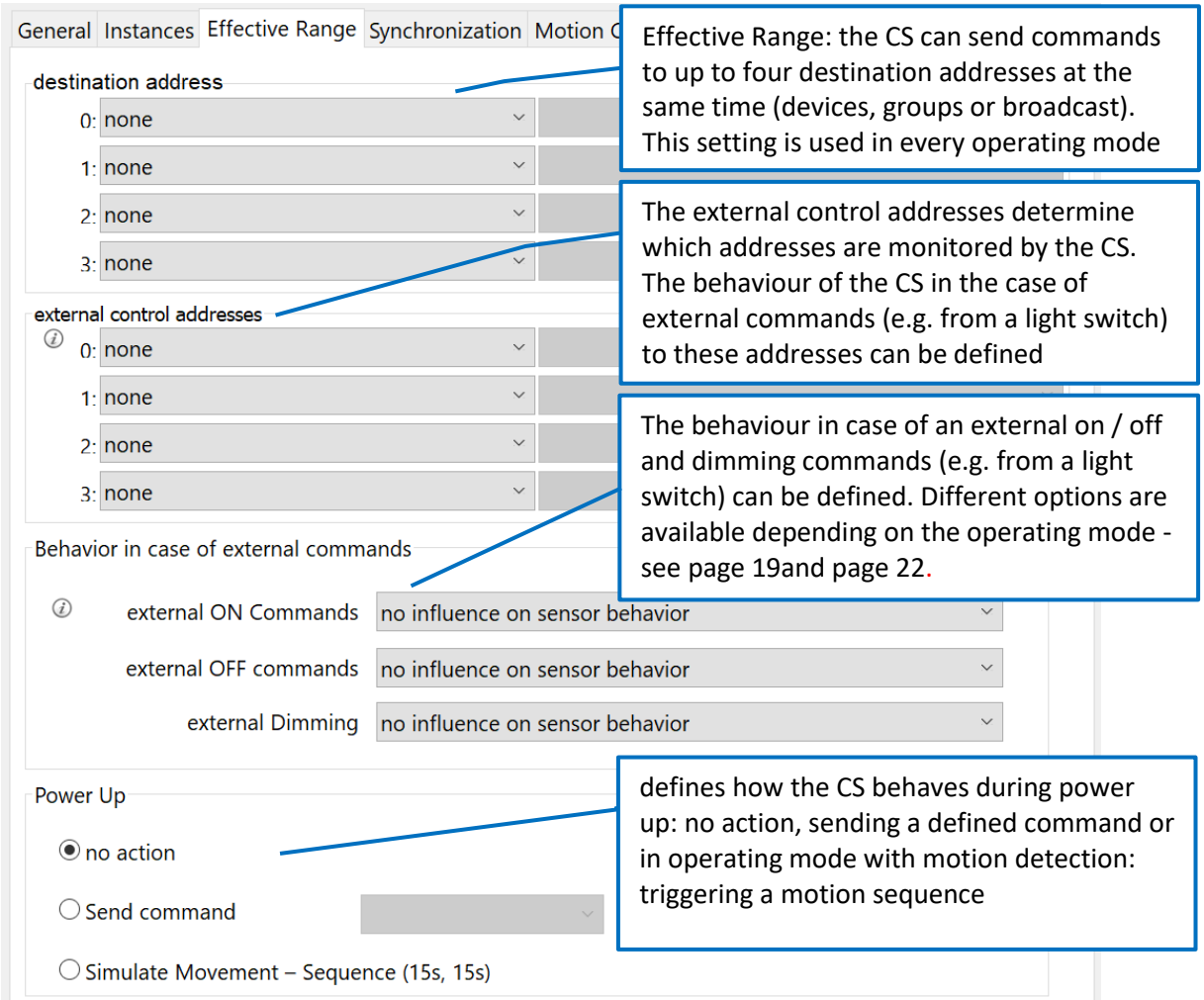

Figure. 8 Tab: “Effective Range“ – destination address and external control address

Tab: “Synchronization” – sensor input and Slaves

See Figure. 9. To include other sensor measurements into the evaluation, additional DALI-2 CS can be selected as sensor inputs.

The selected DALI-2 CS are automatically set to slave mode by the currently configured DALI-2 CS (Master). Depending on the operating mode, different sensors input for each sensor-functionality can be defined:

for “*Motion detection*”:

input for movement,

© 2025-03-02, Lunatone Industrielle Elektronik GmbH

input for light thresholds

for "*Motion detection with constant light control*":

input for movement,

input for light thresholds,

input for constant light control

for "*Constant light control*":

input for constant light control

for "*Light control*":

input for light thresholds.

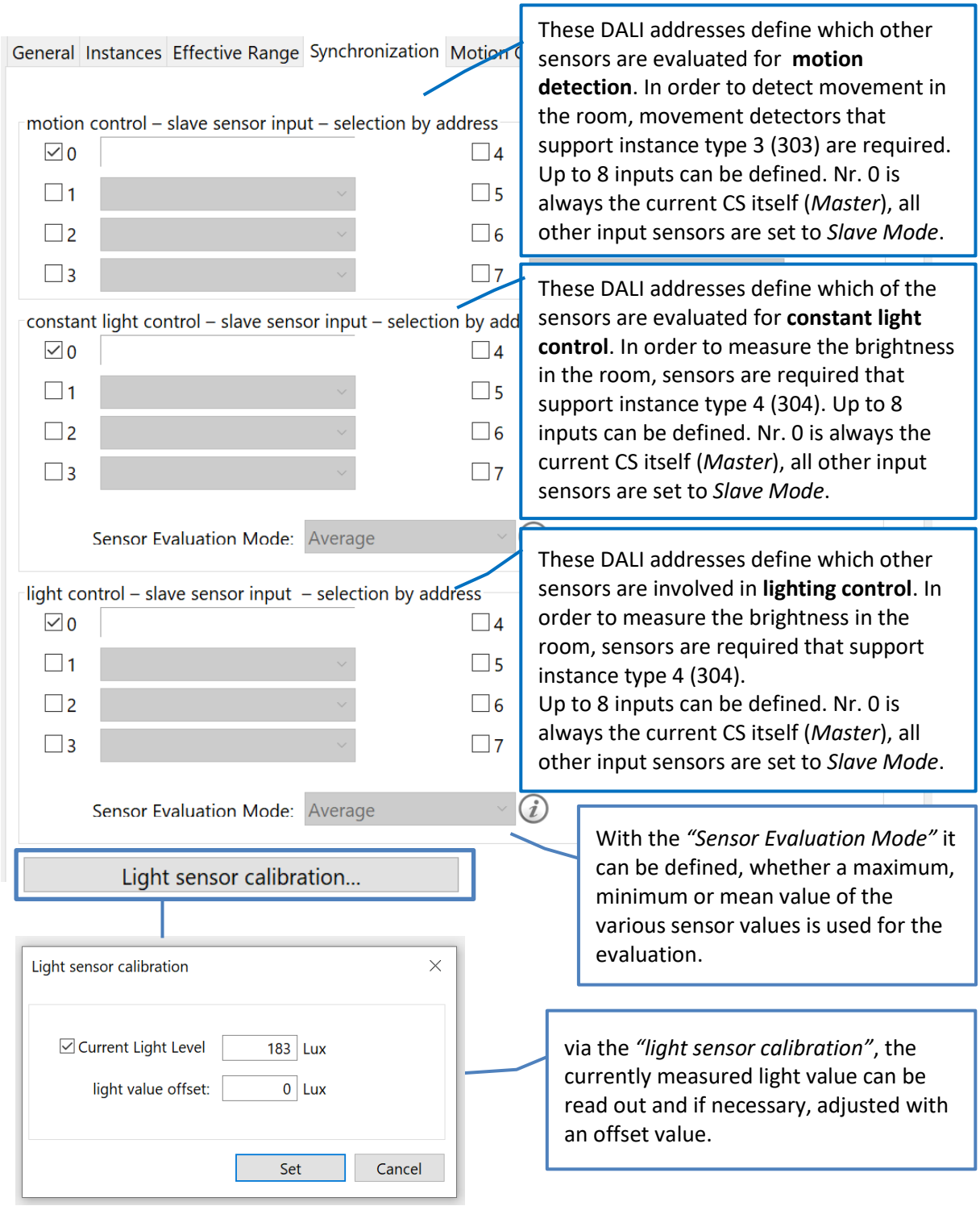

Figure. 9 Tab: "Synchronization" – sensor inputs for measurement evaluation

 © 2025-03-02, Lunatone Industrielle Elektronik GmbH

Tab: “Motion Control“

See Figure. 10, in this tab, the times and light levels of the motion detection sequence, that is triggered by movement, can be defined. As well as the light thresholds to activate the motion detection depending on the lighting conditions. (operating mode description see page 12 and page 13)

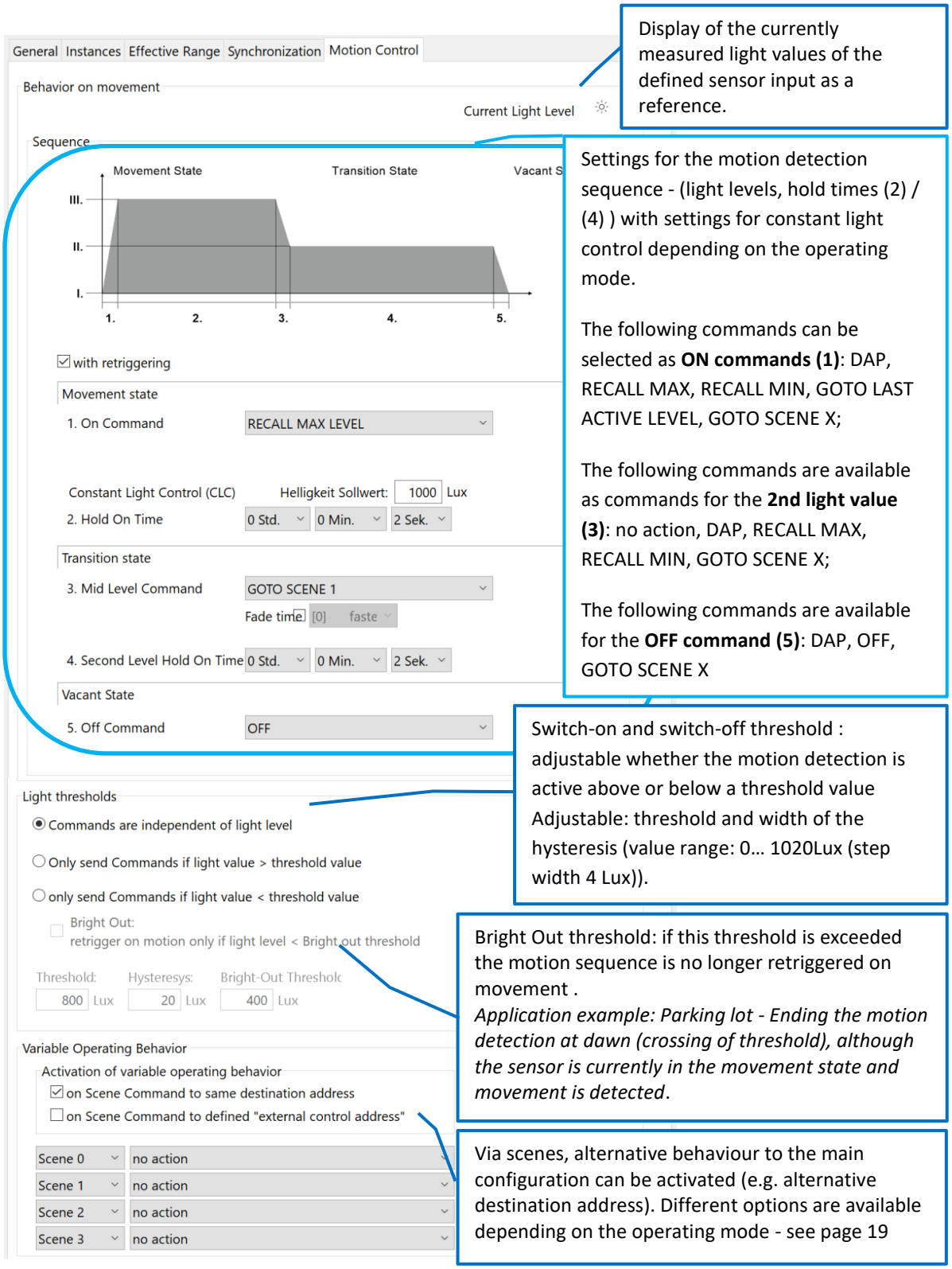

Figure. 10 Tab: „motion detection control“

© 2025-03-02, Lunatone Industrielle Elektronik GmbH

Motion Control - Behaviour with external commands

The operating behaviour can be influenced by external commands (e.g. from a DALI-switch).

In the Cockpit tab "Effective range", the behaviour of the sensor on ON- / OFF- and dimming commands, sent to the 4 configurable "external control addresses", can be defined.

Additionally, the operating behaviour of the sensor can be changed with scene commands, via the tab "Motion detection" -section: Variable Operating Behaviour.

The following settings are available:

Operating mode 1 – motion detection

An external **ON command**
No influence: the ON command is ignored by the CS. The CS continues to carry out the control as configured
External control: motion control is deactivated (The CS does not send any DALI commands), until manually reactivated by an external OFF command.
Simulate movement: start the Motion Detection Sequence (Figure. 6, page 11)
An external **OFF command**
No influence: the OFF command is ignored by the CS. The CS continues to carry out the control as configured
Waiting for motion: change to State 5 and then to OFF state (state 7,Figure. 6), motion detection active - waiting for motion
Disable sensor control: change to state 5 and then to OFF state (state 7,Figure. 6), the motion detection is deactivated until reactivated by an ON command.
an external **DIMMING command:**
No influence: the DIMMING command is ignored by the CS. The CS continues to carry out the control as configured
External control: motion control is deactivated (The CS does not send any DALI commands), until manually reactivated by an external OFF command.
Change light level until end of sequence: the On command light level (State 2, Figure. 6) is changed by dimming. The new light level is retained for the current movement detection sequence

Variable Operating Behaviour - An external **SCENE command**
No action: the SCENE command is ignored by the CS.
Reset to Default: The CS is set to the basic configuration, all previously forced changes to the operating behaviour are terminated.
Alternative destinations: An alternative destination address (user defined) is used instead of the configured standard destination.
Alternative ON Command Light Level DAP: Instead of the currently configured light level DAP command, the alternatively defined DAP value is used in state 2 (Motion Detection Sequence Figure. 6).
Alternative ON Command SCENE: Instead of the currently configured scene command, the alternatively defined scene is used in state 2 (Motion Detection Sequence Figure. 6).
Waiting for motion: go to State 5 and then to OFF state (state 7,Figure. 6),. motion detection active - waiting for motion

Operating Mode 2 – motion detection with constant light control

An external **ON command**
No Influence: the ON command is ignored by the CS. The CS continues to carry out the control as configured
External control: Constant light control and motion control are deactivated (The CS does not send any DALI commands). until they are reactivated by an external OFF command.
Simulate movement: start the Motion Detection Sequence (Figure. 6, page 11)
Simulate movement without constant light control: Starts the motion detection sequence (State 1, Figure. 6) and deactivates the constant light control. The sent ON command is executed instead of constant light control. The

 © 2025-03-02, Lunatone Industrielle Elektronik GmbH

constant light control is temporarily deactivated until the OFF-state (state 7,Figure. 6) is reached.
Constant Light Control: The motion detection is deactivated and constant light control is permanently active until it is cancelled by an OFF command. (Standard behaviour is thereby reactivated)
An **external OFF command**
No Influence: the OFF command is ignored by the CS. The CS continues to carry out the control as configured
Waiting for motion: Got to OFF state - go to State 5 and then to OFF state (state 7,Figure. 6), motion detection active - waiting for motion
Disable sensor control: change to state 5 and then to OFF state (state 7,Figure. 6) , the motion detection is deactivated until reactivated by an ON command. Enables: *„Off Only “: if the CS should only send an off command after a manual on (simulate movement) after the hold time has expired*
an **external DIMMING command:**
no influence: the DIMMING command is ignored by the CS. The CS continues to carry out the control as configured
External control: Constant light control and motion control are deactivated (the CS does not send any DALI commands) until they are reactivated by an OFF command.
Disable constant light control until end of sequence: constant light control is deactivated temporarily during Motion Detection Sequence (State 2). Automatic reactivation of constant light control after end of sequence
Change constant light control reference light level until end of sequence: the reference light level for constant light control is changed by dimming. If no dimming process is detected for 2 seconds, the current light value is adopted as the new setpoint for the constant light control. The new setpoint is only retained for the current movement detection sequence (as long as movement is detected).
Change constant light control reference light level: the reference light level for constant light control is changed by dimming. If no dimming process is detected for 2 seconds, the current light value is adopted as the new setpoint for the constant light control.

Variable Operating Behaviour - An **external SCENE command**
No action: the SCENE command is ignored by the CS
Reset to defaults: The CS is set to the basic configuration, all previously forced changes to the operating behaviour are terminated.
Alternative destinations: An alternative destination address (user defined) is used instead of the configured standard destination.
Alternative ON Command Light Level DAP: Instead of the currently configured light level DAP command, the alternatively defined DAP value is used in state 2 (Motion Detection Sequence Figure. 6).
Alternative ON Command SCENE: Instead of the currently configured scene command, the alternatively defined scene is used in state 2 (Motion Detection Sequence Figure. 6).
Alternative constant light control reference light level: Instead of the current reference value an alternative user defined light level is used
Disable Constant Light Control until end of sequence: constant light control is deactivated temporarily during Motion Detection Sequence (State 2). Automatic reactivation of constant light control once no more movement is detected.
external control: Constant light control and motion control are deactivated. The CS does not send any DALI commands.
Waiting for motion: Got to OFF state - go to State 5 and then to OFF state (State 7,Figure. 6) motion detection active - waiting for motion

© 2025-03-02, Lunatone Industrielle Elektronik GmbH

Tab: „Light Control“

Depending on the selected operating mode:

Operating mode: Constant light control

See Figure. 12. The tab “light control” contains the settings for constant light control (CLC) if the Operating mode: "constant light control" was selected.

Operating mode: Light threshold control

See Figure. 11. If the Operating Mode: "Light-controlled” was selected the light sensor control functions as a threshold switch. A maximum of 4 thresholds can be defined. The defined DALI commands will be executed if the values are exceeded or fallen below of.

2 of the 4 available thresholds can also be used to send commands periodically. The commands are sent at a user-defined interval until the threshold condition is no longer met.

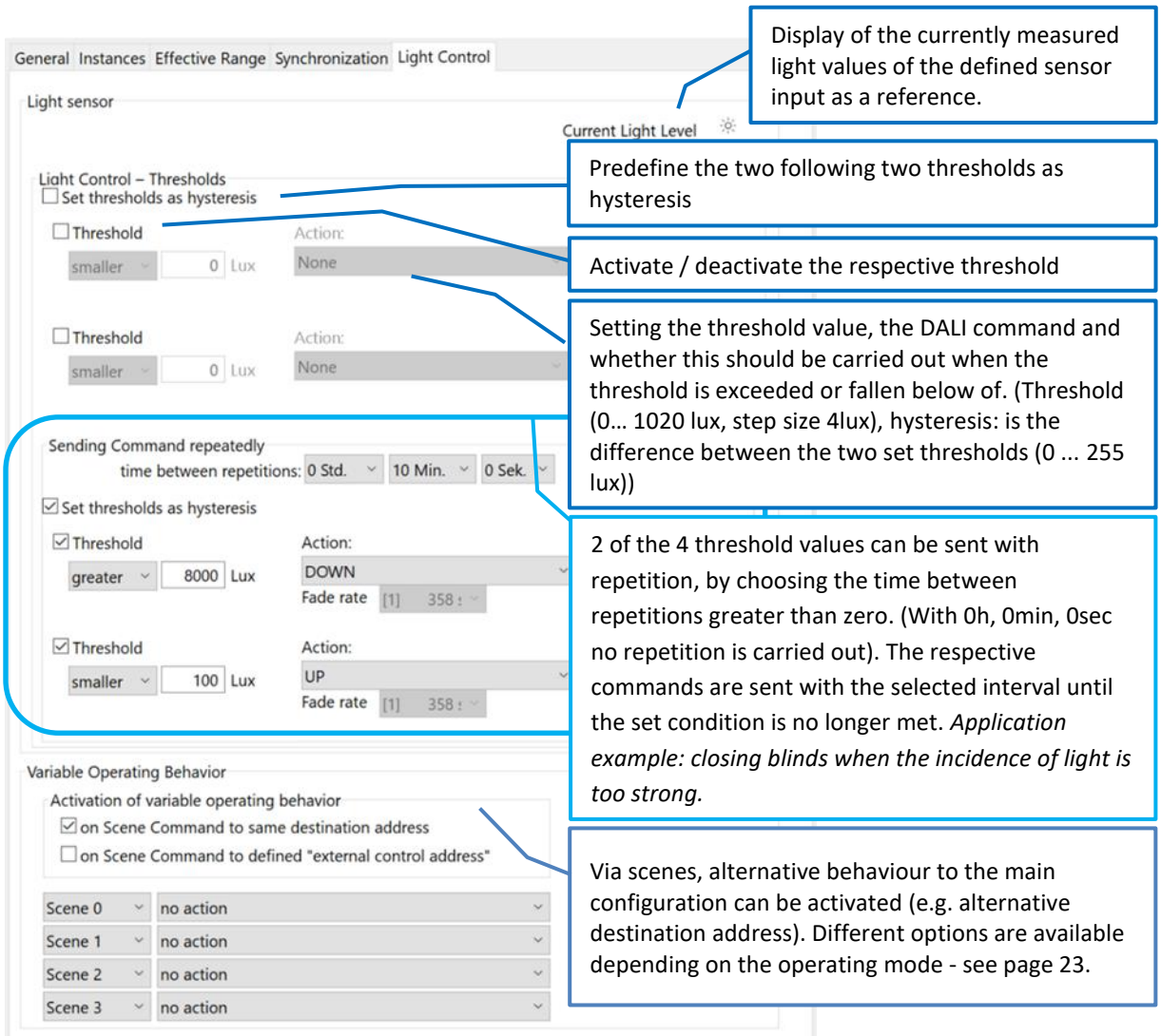

Figure. 11 Tab: „Light Control“ -Operating Mode: without constant light control

© 2025-03-02, Lunatone Industrielle Elektronik GmbH

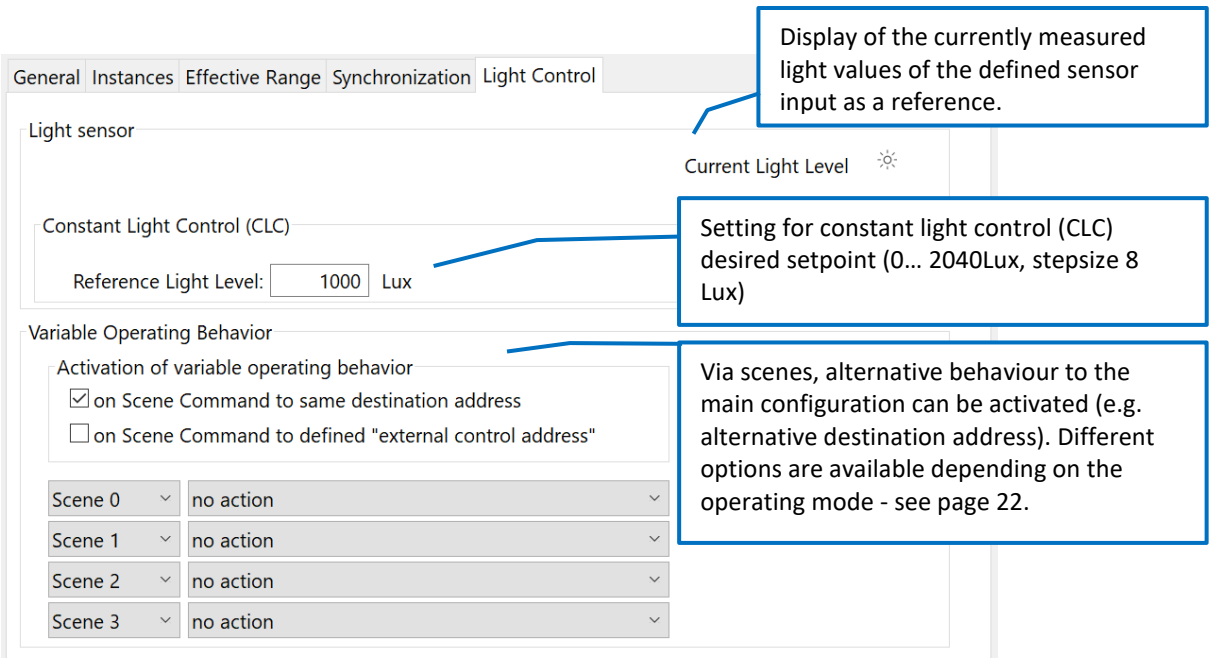

Figure. 12 Tab: „Light Control“ – Operating Mode : with constant light control

Light Control - Behaviour with external commands

The operating behaviour can be influenced by external commands (e.g. from a DALI-switch).

In the Cockpit tab "Effective range", the behaviour of the sensor on ON- / OFF- and dimming commands, sent to the 4 configurable "external control addresses", can be defined.

Additionally, the operating behaviour of the sensor can be changed with scene commands, via the tab "Motion detection" -section: Variable Operating Behaviour.

The following settings are available:

Operating Mode 3 – constant light control

An **external ON command**
No influence: the ON command is ignored by the CS. The CS continues to carry out the control as configured
External control: the constant light control is deactivated. (the CS does not send any DALI commands), until reactivated by an external OFF command.
Enable constant light control: The constant light control is activated.

An **external OFF command**
No influence: the OFF command is ignored by the CS. . The CS continues to carry out the control as configured
Disable constant light control: The constant light control is deactivated.

an **external DIMMING command:**
No influence: the DIMMING command is ignored by the CS. The CS continues to carry out the control as configured
Disable constant light control temporarily: constant light control is deactivated until the next OFF command.
Change constant light control reference light - temporary: the reference light level for constant light control is changed by dimming. If no further dimming process is detected for 2 seconds, the current light value is adopted as the new setpoint for the constant light control. The new setpoint is only retained until the next OFF command.
Change constant light control reference light level -general: the reference light level for constant light control is changed by dimming. If no dimming process is detected for 2 seconds, the current light value is adopted as the new setpoint for the constant light control.

© 2025-03-02, Lunatone Industrielle Elektronik GmbH

Variable Operating Behaviour - An **external SCENE command**
No action: the SCENE command is ignored by the CS
Reset to Default: The CS is set to the basic configuration, all previously forced changes to the operating behaviour are terminated.
Alternative destinations: An alternative destination address (user defined) is used instead of the configured standard destination.
Alternative constant light control reference light level: Instead of the current reference value an alternative user defined light level is used
Enable constant light control: The constant light control is activated.
External Control: The constant light control is deactivated (the CS does not send any DALI commands).

Operating Mode 4 – light threshold control

Variable Operating Behaviour - An **external SCENE command**
No action: the SCENE command is ignored by the CS
Reset to Defaults: The CS is set to the basic configuration, all previously forced changes to the operating behaviour are terminated.
Alternative Destinations: An alternative destination address (user defined) is used instead of the configured standard destination.
External control: the light threshold control is deactivated (the CS does not send any DALI commands).

Instances

The DALI-2 CS and DALI-2 CS Integration support 2 instances standardized according to DALI: motion detector instance (303) for motion detection and light sensor instance (304) for light measurement.
In *Slave mode*, the DALI-2 CS is automatically in instance mode. The factory settings are designed for use in conjunction with a DALI-2 CS *Master*.

- Instance Nr. 0: Type motion detector
- Instance Nr. 1: Type light sensor

Instances – General

Each instance can be configured individually. Some settings have the same functionality for all sensor instances and are therefore described in this section. Instance specific settings are explained for each individual instances in the following respective sections.

enable/disable
If instances are not required, they can be deactivated. In this case, event messages are not sent, and the measured values are not updated. They can, however, still be queried via a “Query” command, and the DALI-2 configuration commands and queries are still supported.

Instance group
Up to three instance groups can be assigned for each instance. Only the "Primary Group" is used for the event.

Instance type
The instance type defines which DALI-2 standard is valid for this instance. (The different instance types are specified in the DALI-2 standard.)

Instance number
Each instance in a device has a unique instance number.

© 2025-03-02, Lunatone Industrielle Elektronik GmbH

Device group
The device can be assigned to up to 32 device groups (0...31). The lowest device group is used for the event.

Device address
A device address (or short address) (0..63) can be assigned to each device. With this the device can be clearly addressed. (Identical short addresses should be avoided.)

Event Scheme
The event scheme determines which information is transferred with the event. This information is required, to enable recognition and / filtering of events on the bus. The following 5 options are available:

- Instance addressing:
  instance type and instance number
- Device Addressing:
  device address and instance type
- Device/Instance Addressing:
  device address and instance number
- Device Group Addressing:
  Device group and instance type
- Instance Group Addressing:
  Instance group and instance type

Event priority
The event priority determines the order in which events are sent when they occur simultaneously on the bus. Priority 2 = highest and 5 = lowest.

Dead Time
The dead time can be set for each instance. It determines the time that must pass before an event can be sent again. This also applies if the event information (measured value) changes. If no dead time is required, it can be deactivated.

Report Time
If the event information does not change, the event is sent cyclically with the report time. The report time can be set for each instance. It determines the maximum time between a sent event and resending.

Hysteresis
Not every change in value leads to an event being generated. The hysteresis can be used to set which percentage change is necessary to trigger a new transmission. Attention, the hysteresis band is not arranged symmetrically. The following applies:
Increasing value
The condition for an event is only fulfilled if the next value falls below the previous value minus the hysteresis or if the next value is greater than the previous value.
Decreasing value
the condition for an event is only fulfilled if the next value exceeds the previous value plus the hysteresis or the next value is smaller than the previous value.

Hysteresis Min
Is the minimal hysteresis value that cannot be fallen below of.

Instance 0 – Motion

Is an instance standardized by DALI-2 (62386-303), for sensors that detect motion. All settings are implemented according to the standard. The instance is DALI-2 certified.

The sensor switches between the following states:

- People in the room and movement (0xFF)
- People in the room and no movement (0xAA)
- Empty room (0x00)

If the sensor detects movement, it immediately changes to the state: "people in

 © 2025-03-02, Lunatone Industrielle Elektronik GmbH

the room and movement". This state is exited after 1 second at the earliest if no further movement is detected. In this case it changes to the state "People in the room and no movement". After the hold time has expired it changes to the state "Empty room"- Vacant.

***Report Time*:** can only be set if the event filter "Repeat" is activated and the events: "Still Vacant" and "Still Occupied" are enabled. The time between sending a "Still-Event" again is determined by the Report Time.

***Hold Time*:** Is the time that must pass before the state "people in the room and no movement" is changed to the state "empty room". If movement is detected during this time the state is changed back to: "People in the room and movement". (min. 1 second)

***Query*:** The current sensor state can be queried using the DALI command "Query input value". The following values are possible: 0x00, 0xAA,0xFF
(see paragraph above for the possible states)

***Event*:** the sensor status is transmitted by events. The following event information is available:

Bit0 = 0: No Movement
Bit0 = 1: Movement
Bit2/Bit1 = 00: Vacant
Bit2/Bit1 = 10: Still Vacant
Bit2/Bit1 = 01: Occupied
Bit2/Bit1 = 11: Still Occupied
Bit3 = 1: Movement Sensor
Bit5..Bit9 = 0: unused

More details can be found in the standard 62386-303.

Event filter: The event filter defines for which status change an event is generated.
Filter arrangement:

Bit0: Occupied Event active
Bit1: Vacant Event active
Bit2: Still Vacant/Occupied Event active
Bit3: Movement Event active
Bit4: No Movement Event active
Bit5..Bit7: unused

Example events during the movement sequence:
1: Movement detected:
Event filter "Movement", event filter "Occupied":
→ Event data: 0x0B
2: Continued movement: with set report time, event filter "Still Occupied/Vacant": → Event data: 0x0F
3: Movement stops: event filter "No Movement":
→Event data: 0x0A
4. Expiry of set hold time:
Event filter "Vacant":→ Event data: 0x08
5. Still no movement: with set report time: event filter "Still Occupied/Vacant"
→ Event data 0x0C

Instance 1 – Light intensity

is an instance standardized by DALI-2 (62386-304). All settings are implemented according to the standard. The instance is DALI-2 certified.

The current light value (lux) is measured by the sensor and can either be queried using a "Query" command or can be automatically provided by the sensor using an event.

The measuring range is 0Lux ... 2046Lux. The resolution differs between queries and generated events. A query supports a resolution of 1Lux (11Bit) and an event a resolution of 2Lux (10Bit). This means that the values obtained from an event must be multiplied by 2 to determine the light level in lux.

Query: the light level can be queried using the commands "Query input value" and "Query Input value latch". 11 bits are taken from the returned data, which correspond to the light level in lux:
Query Input Value → answer: 0x6C

© 2025-03-02, Lunatone Industrielle Elektronik GmbH

Query Input Value Latch → answer: 0x9B

0x6C = **0110 1100**
0x9B = **100**1 1011
→ **0110 1100 100** = 868 Lux

Hysteresis: For information on the hysteresis see section Instances -General: *Hysteresis* page 24.

Hysteresis Min: set in lux. For general information on the hysteresis min see section Instances – General: *Hysteresis Min* page 24

Event Filter: The light instance generates only one event with 10-bit resolution (0… 2047 lux, step size 2lux). If the filter is deactivated, no events will be sent.

Cockpit - Instances

The settings for the instances can be made in the Cockpit – tab "Instances".

Example for settings of instance 0 – motion see Figure. 13. Example for settings of instance 1 – light intensity see Figure. 14

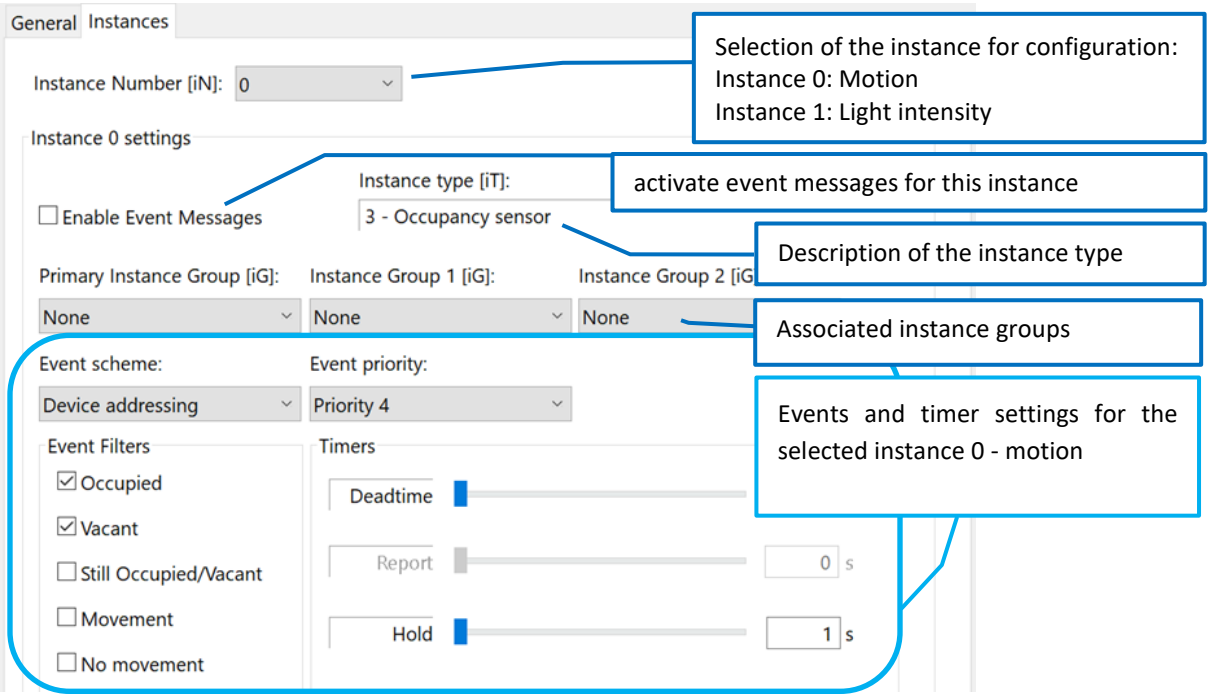

Figure. 13 tab: „Instances" – motion detector instance

© 2025-03-02, Lunatone Industrielle Elektronik GmbH

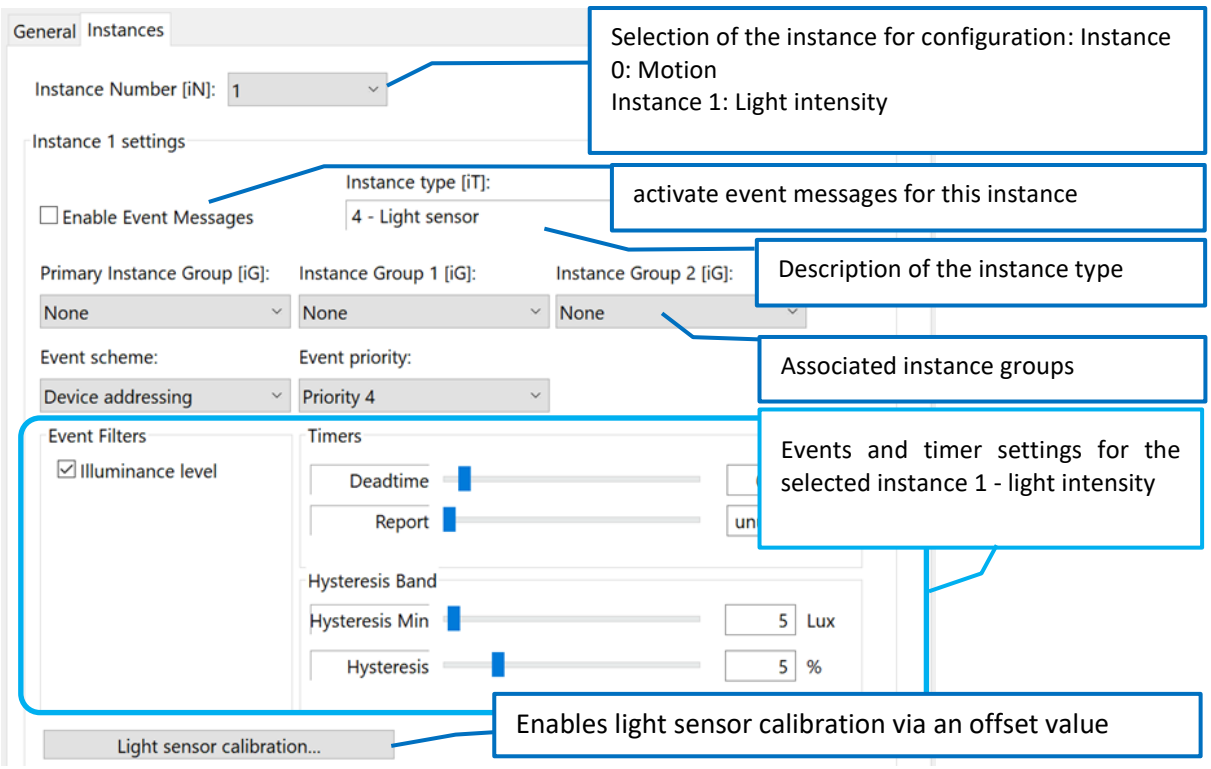

Figure. 14 tab: “instances“ – light sensor instance

© 2025-03-02, Lunatone Industrielle Elektronik GmbH

Purchase Order Information

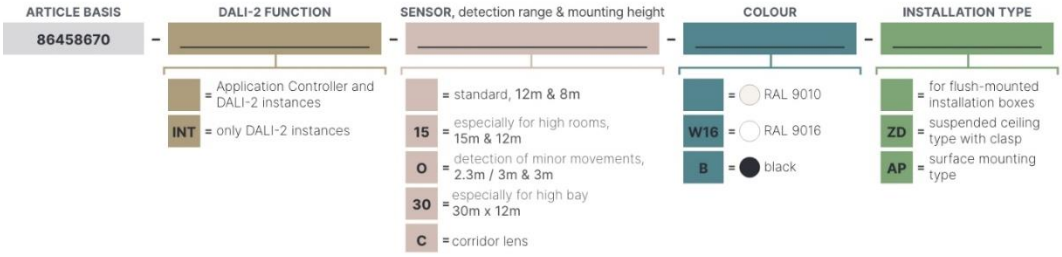

Lens types:

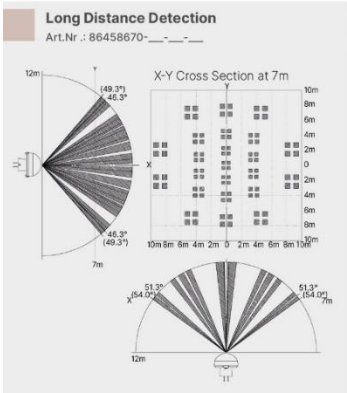

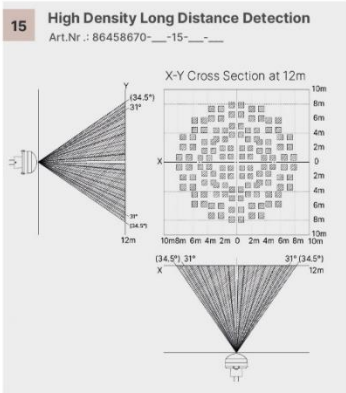

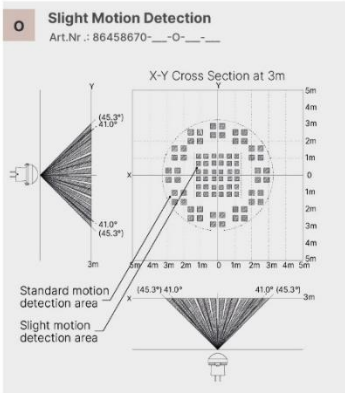

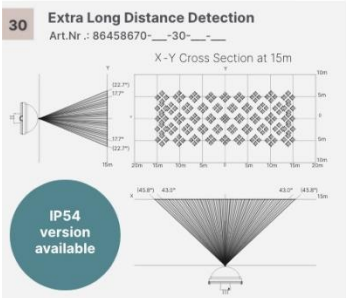

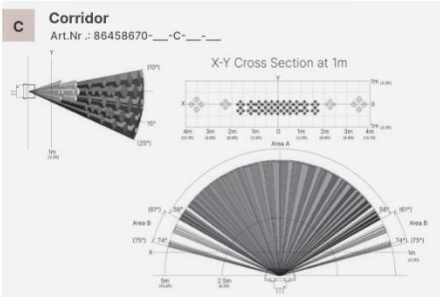

Housing colour:

Installation type:

© 2025-03-02, Lunatone Industrielle Elektronik GmbH

Standard Version

Art.Nr. 86458670: DALI-2 CS, sensor module (motion/ light), **Application Controller and Instance mode,** pure white (RAL9010), back box installation

Art.Nr. 86458670-AP pure white (RAL9010), surface mounting
Art.Nr. 86458670-ZD pure white (RAL9010), suspended ceiling (spring)
Art.Nr. 86458670-W16 traffic white (RAL9016), back box installation
Art.Nr. 86458670-W16-AP traffic white (RAL9016), surface mounting
Art.Nr. 86458670-W16-ZD traffic white (RAL9016), suspended ceiling (spring)
Art.Nr. 86458670-B black, back box installation
Art.Nr. 86458670-B-AP black, surface mounting
Art.Nr. 86458670-B-ZD: black, suspended ceiling (spring)

Art.Nr. 86458670-INT: DALI-2 CS Integration, sensor module (motion/ light), **Instance mode for Integration**, pure white (RAL9010), back box installation

Art.Nr. 86458670-INT-AP pure white (RAL9010), surface mounting
Art.Nr. 86458670-INT-ZD pure white (RAL9010), suspended ceiling (spring)
Art.Nr. 86458670-INT-W16 traffic white (RAL9016), back box installation
Art.Nr. 86458670-INT-W16-AP traffic white (RAL9016), surface mounting
Art.Nr. 86458670-INT-W16-ZD: traffic white (RAL9016), suspended ceiling (spring)
Art.Nr. 86458670-INT-B black, back box installation
Art.Nr. 86458670-INT-B-AP black, surface mounting
Art.Nr. 86458670-INT-B-ZD: black, suspended ceiling (spring)

Hall Version – for halls / high ceilings: presence detection range 15m

Art.Nr. 86458670-15: DALI-2 CS, sensor module (motion/ light), presence detection range 15m**,** **Application Controller and Instance mode**, pure white (RAL9010), back box installation

Art.Nr. 86458670-15-AP pure white (RAL9010), surface mounting
Art.Nr. 86458670-15-ZD pure white (RAL9010), suspended ceiling (spring)
Art.Nr. 86458670-15-W16 traffic white (RAL9016), back box installation
Art.Nr. 86458670-15-W16-AP traffic white (RAL9016), surface mounting
Art.Nr. 86458670-15-W16-ZD: traffic white (RAL9016), suspended ceiling (spring)
Art.Nr. 86458670-15-B black, back box installation
Art.Nr. 86458670-15-B-AP black, surface mounting
Art.Nr. 86458670-15-B-ZD: black, suspended ceiling (spring)

Art.Nr. 86458670-INT-15: DALI-2 CS Integration, sensor module (motion/ light), presence detection range 15m, **Instance mode for Integration**, pure white (RAL9010), back box installation

Art.Nr. 86458670-INT-15-AP pure white (RAL9010), surface mounting
Art.Nr. 86458670-INT-15-ZD pure white (RAL9010), suspended ceiling (spring)
Art.Nr. 86458670-INT-15-W16 traffic white (RAL9016), back box installation
Art.Nr. 86458670-INT-15-W16-AP traffic white (RAL9016), surface mounting
Art.Nr. 86458670-INT-15-W16-ZD: traffic white (RAL9016), suspended ceiling (spring)
Art.Nr. 86458670-INT-15-B black, back box installation
Art.Nr. 86458670-INT-15-B-AP black, surface mounting
Art.Nr. 86458670-INT-15-B-ZD: black, suspended ceiling (spring)

 © 2025-03-02, Lunatone Industrielle Elektronik GmbH

Office Version - for office applications: detection of small movement / seated people

Art.Nr. 86458670-O: DALI-2 CS, sensor module (motion/ light), for office applications (detection of arm movement of seated persons), **Application Controller and Instance mode**, pure white (RAL9010), back box installation

Art.Nr. 86458670-O-AP pure white (RAL9010), surface mounting
Art.Nr. 86458670-O-ZD pure white (RAL9010), suspended ceiling (spring)
Art.Nr. 86458670-O-W16 traffic white (RAL9016), back box installation
Art.Nr. 86458670-O-W16-AP traffic white (RAL9016), surface mounting
Art.Nr. 86458670-O-W16-ZD traffic white (RAL9016), suspended ceiling (spring)
Art.Nr. 86458670-O-B black, back box installation
Art.Nr. 86458670-O-B-AP black, surface mounting
Art.Nr. 86458670-O-B-ZD black, suspended ceiling (spring)

Art.Nr. 86458670-INT-O: DALI-2 CS Integration, sensor module (motion/ light), (detection of arm movement of seated persons), **Instance mode for Integration**, pure white (RAL9010), back box installation

Art.Nr. 86458670-INT-O-AP pure white (RAL9010), surface mounting
Art.Nr. 86458670-INT-O-ZD pure white (RAL9010), suspended ceiling (spring)
Art.Nr. 86458670-INT-O-W16 traffic white (RAL9016), back box installation
Art.Nr. 86458670-INT-O-W16-AP traffic white (RAL9016), surface mounting
Art.Nr. 86458670-INT-O-W16-ZD traffic white (RAL9016), suspended ceiling (spring)
Art.Nr. 86458670-INT-O-B black, back box installation
Art.Nr. 86458670-INT-O-B-AP black, surface mounting
Art.Nr. 86458670-INT-O-B-ZD black, suspended ceiling (spring)

Long Distance Version - for high bay applications

Art.Nr. 86458670-30: DALI-2 CS, sensor module (motion/ light), for high bay applications, **Application Controller and Instance mode**, pure white (RAL9010), back box installation

Art.Nr. 86458670-30-AP pure white (RAL9010), surface mounting
Art.Nr. 86458670-30-AP-IP54 pure white (RAL9010), surface mounting, IP54
Art.Nr. 86458670-30-ZD pure white (RAL9010), suspended ceiling (spring)
Art.Nr. 86458670-30-ZD-IP54 pure white (RAL9010), suspended ceiling (spring), IP54
Art.Nr. 86458670-30-W16 traffic white (RAL9016), back box installation
Art.Nr. 86458670-30-W16-IP54 traffic white (RAL9016), back box installation, IP54
Art.Nr. 86458670-30-W16-AP traffic white (RAL9016), surface mounting
Art.Nr. 86458670-30-W16-AP-IP54 traffic white (RAL9016), surface mounting, IP54
Art.Nr. 86458670-30-W16-ZD traffic white (RAL9016), suspended ceiling (spring)
Art.Nr. 86458670-30-W16-ZD-IP54 traffic white (RAL9016), suspended ceiling (spring), IP54
Art.Nr. 86458670-30-B black, back box installation
Art.Nr. 86458670-30-B-IP54 black, back box installation, IP54
Art.Nr. 86458670-30-B-AP black, surface mounting
Art.Nr. 86458670-30-B-AP-IP54 black, surface mounting, IP54
Art.Nr. 86458670-30-B-ZD black, suspended ceiling (spring)
Art.Nr. 86458670-30-B-ZD black, suspended ceiling (spring), IP54

 © 2025-03-02, Lunatone Industrielle Elektronik GmbH

Art.Nr. 86458670-INT-30: DALI-2 CS Integration, sensor module (motion/ light), high bay applications, **Instance mode for Integration**, pure white (RAL9010), back box installation

Art.Nr. 86458670-INT-30-AP pure white (RAL9010), surface mounting
Art.Nr. 86458670-INT-30-AP-IP54 pure white (RAL9010), surface mounting, IP54
Art.Nr. 86458670-INT-30-ZD pure white (RAL9010), suspended ceiling (spring)
Art.Nr. 86458670-INT-30-ZD-IP54 pure white (RAL9010), suspended ceiling (spring), IP54
Art.Nr. 86458670-INT-30-W16 traffic white (RAL9016), back box installation
Art.Nr. 86458670-INT-30-W16-IP54 traffic white (RAL9016), back box installation, IP54
Art.Nr. 86458670-INT-30-W16-AP traffic white (RAL9016), surface mounting
Art.Nr. 86458670-INT-30-W16-AP-IP54 traffic white (RAL9016), surface mounting, IP54
Art.Nr. 86458670-INT-30-W16-ZD traffic white (RAL9016), suspended ceiling (spring)
Art.Nr. 86458670-INT-30-W16-ZD-IP54 traffic white (RAL9016), suspended ceiling (spring), IP54
Art.Nr. 86458670-INT-30-B black, back box installation
Art.Nr. 86458670-INT-30-B-IP54 black, back box installation, IP54
Art.Nr. 86458670-INT-30-B-AP black, surface mounting
Art.Nr. 86458670-INT-30-B-AP-IP54 black, surface mounting, IP54
Art.Nr. 86458670-INT-30-B-ZD black, suspended ceiling (spring)
Art.Nr. 86458670-INT-30-B-ZD-IP54 black, suspended ceiling (spring), IP54

Corridor Version – for corridors

Art.Nr. 86458670-C: DALI-2 CS, sensor module (motion/ light), corridor applications, **Application Controller and Instance mode**, pure white (RAL9010), back box installation

Art.Nr. 86458670-C-AP pure white (RAL9010), surface mounting
Art.Nr. 86458670-C-ZD pure white (RAL9010), suspended ceiling (spring)
Art.Nr. 86458670-C-W16 traffic white (RAL9016), back box installation
Art.Nr. 86458670-C-W16-AP traffic white (RAL9016), surface mounting
Art.Nr. 86458670-C-W16-ZD traffic white (RAL9016), suspended ceiling (spring)
Art.Nr. 86458670-C-B black, back box installation
Art.Nr. 86458670-C-B-AP black, surface mounting
Art.Nr. 86458670-C-B-ZD black, suspended ceiling (spring)

Art.Nr. 86458670-INT-C: DALI-2 CS Integration, sensor module (motion/ light), corridor application, **Instance mode for Integration**, pure white (RAL9010), back box installation

Art.Nr. 86458670-INT-C-AP pure white (RAL9010), surface mounting
Art.Nr. 86458670-INT-C-ZD pure white (RAL9010), suspended ceiling (spring)
Art.Nr. 86458670-INT-C-W16 traffic white (RAL9016), back box installation
Art.Nr. 86458670-INT-C-W16-AP traffic white (RAL9016), surface mounting
Art.Nr. 86458670-INT-C-W16-ZD traffic white (RAL9016), suspended ceiling (spring)
Art.Nr. 86458670-INT-C-B black, back box installation
Art.Nr. 86458670-INT-C-B-AP black, surface mounting
Art.Nr. 86458670-INT-C-B-ZD black, suspended ceiling (spring)

Version DALI-2 CS Integration
https://www.lunatone.com/en/product/dali-2-cs-integration/

Version DALI-2 CS THP-AQ Integration
https://www.lunatone.com/en/product/dali-2-cs-integration-thp-aq/

 © 2025-03-02, Lunatone Industrielle Elektronik GmbH

Additional Information and Equipment

DALI-Cockpit – DALI system configuration tool, free when using a Lunatone interface device
https://www.lunatone.com/en/product/dali-cockpit/

Lunatone DALI products
http://www.lunatone.at/en/

Lunatone datasheets and manuals
http://lunatone.at/en/downloads/

Lunatone sensor instance manual
https://www.lunatone.com/wp-content/uploads/2022/11/Lunatone_DALI-2_Sensor_Instances_EN_M0026.pdf

Instance guide
https://www.lunatone.com/wp-content/uploads/2021/10/DALI-2_Instance-Guide_EN_M0024.pdf

Contact

Technical Support: support@lunatone.com

Requests: sales@lunatone.com

www.lunatone.com

Disclaimer

Subject to change. Information provided without guarantee. The datasheet refers to the current delivery.

The function in installations with other devices must be tested for compatibility in advance.

© 2025-03-02, Lunatone Industrielle Elektronik GmbH